AMERICAN MADE GRILLS

SIDE BURNER USER MANUAL

PROUDLY MADE IN THE USA

TABLE OF CONTENTS

SAFETY WARNINGS & CODES 04
SAFETY& INSTALL ATION INSTRUCTIONS 06
WHERE TO INSTALL THE BURNER 08
GAS SAFETY REQUIREMENTS.....10
CLEANING & MAINTENANCE.....14
OPERATING INSTRUCTIONS 16
WARRANTY 18

SAFETY WARNINGS & CODES

IF YOU SMELL GAS

1. Shut off the gas to the appliance.
2. Extinguish any open flame.
3. Open lid to vent.
4. If odor continues, keep away from the appliance, and immediately call your gas supplier or fire department.

INSTALLATION

CODE AND SUPPLY REQUIREMENTS

This side burner must be installed in accordance with local codes and ordinances, or, in the absence of local codes, with either the latest National Fuel Gas Code (ANSI Z223.1/NFPA 54), and Natural Gas and Propane Storage and Handling Installation Code (CSA-B149.1).

This appliance and its individual shutoff valves must be disconnected from the gas supply piping system when testing the system at pressures in excess of ½ psig (3.5 kPa).

This appliance must be isolated from the gas supply piping system by closing its individual manual shut-off valves during any pressure testing of the gas supply system at pressures up to and including ½ psig (3.5 kPa).

WARNING!

1. Do not store or use gasoline or other flammable vapors and liquids in the vicinity of this or any other appliance.

2. A propane cylinder not connected for use shall not be stored in the vicinity of this or any other appliance with flame.

WARNING!

Improper installation, adjustment, alteration, service, or maintenance can cause injury or property damage. Refer to this manual. For assistance or additional information consult a qualified professional installer, service agency, or the gas supplier.

All electrical outlets in the vicinity of the power burner must be properly grounded in Accordance with local codes or, in the absence of local codes, with the National Electrical Code, ANSI/NFPA 70, or the Canadian Electrical Code, CSA C22.1, whichever is applicable. Keep all electrical supply cords and fuel supply hoses away from any heated surface at all times.

SAFETY & INSTALLATION INSTRUCTIONS

⚠ WARNING!

To Reduce the risk of fire, electrical shock, or injury, read and follow these basic precautions before operating your gas side burner.

WHEN USING YOUR SIDE BURNER, PLEASE READ AND FOLLOW THESE BASIC PRECAUTIONS:

POWER BURNER INSTALLATION

This Outdoor-cooking appliance (Side Burner) must be installed in accordance with all local and state codes INSPECTED by your local CITY & Fire department. If installation is planned in an area with no local codes, the gas burner must be installed in accord with the National Fuel Gas Code ANSI Z223.1 and storage and handling of liquefied petroleum gases, ANSI/NFPA 58 or CSA B149.1 natural gas and propane installation code. ALWAYS USE PROFESSIONAL BUILDERS & INSTALLERS. For Safety – have inspected by your local city, Gas Company and Fire Department before use. This is NOT an indoor appliance – for outdoor use only. Do not install into a combustible cabinet without an insulating liner.

CALIFORNIA PROPOSITION 65 WARNING

The burning of gas cooking fuel generates some by-products, which are on the list of substances, which are known by the State of California to cause cancer or reproductive harm. California law requires businesses to warn customers of potential exposure to such substances. To minimize exposure to these substances, always operate the unit according to the use and care manual, ensuring you provide good ventilation when cooking.

⚠ WARNING!

Failure to read and follow the "USE AND CARE" Instructions could result in a FIRE or EXPLOSION that could cause serious bodily injury, death or property damage.

Always have your appliance vented correctly, installed by a professional and inspected by the local city building department.

NOTE!

DO NOT USE THIS APPLIANCE UNDER OVERHEAD COMBUSTIBLE SURFACES

GENERAL SAFETY REQUIREMENTS

1. The installation of this appliance must conform with local codes or, in the absence of local codes, Either the National Fuel Gas Code, ANZI Z223.1/NFPA 54, or CAN/CGAB149.1, Natural Gas Installation Code or CAN CGA-B149.2, Propane Installation Code.
2. This outdoor cooking gas appliance is not intended to be installed in or on recreational vehicles and /or boats
3. This outdoor cooking gas appliance is intended for use outdoors and shall not be used in a building, garage or any other enclosed area.
4. Minimum clearance of 16" – 18" inches from the back and sides of the Side Burner to adjacent combustible construction must be maintained. This outdoor cooking gas appliance shall not be located under overhead unprotected combustible construction.
5. If the use of an external electrical source is requires when installed, this outdoor cooking gas appliance must be electrically grounded in accordance with the local codes or, in the absence of local codes, with the National Electrical Code, ANSI/NFPA 70, or the Canadian Electrical Code, CSA C22.1. Keep any electrical supply cord, or the fuel supply hose away from any heated surfaces.
6. Keep your Side Burner in an area clear and free from combustible materials, gasoline and other flammable vapors and liquids.
7. DO NOT obstruct the flow of combustion and ventilation air to this appliance. Keep the ventilation openings of the cylinder enclosure free and clear from debris.
8. Check all gas connections for leaks with soapy water solution and brush. Never use an open flame to test for gas leaks.
9. Check flexible hoses for cuts and wear that may affect the safety before each use.
10. Never use the Side Burner in a windy area.
11. Never use the Side Burner without the drip pan installed and push all the way to the back of the Side Burner. Without the drip pan, hot liquid and debris could leak downward and could produce a fire hazard.

- NOTE: In Massachusetts: All gas products must be installed using a "Massachusetts" licensed plumber or gas fitter. A "T" Handle type manual gas valve must be installed in the gas supply line to this appliance. This applies to permanently installed natural gas and propane installations. This does not apply to propane portable installations using a 20-pound tank.

WHERE TO INSTALL

IMPORTANT!

THIS SIDE BURNER IS FOR OUTDOOR USE ONLY.

WARNING!

- The side burner must be installed in a masonry or other type of **f reproof surround.** The unit is not insulated and therefore must be installed or placed with 16" – 18" of side and back clearance from unprotected combustible materials such as wood, plastic, or stucco with wood framing. PLEASE NOTE: if this is not done, the combustible material will catch on fire and potentially damage your house / structure and may cause bodily harm due to the fire. Optional insulating liners are available.

Do not install this unit under unprotected flammable surfaces. Do not install or use this appliance inside a building, garage, or any other enclosed area. It must not be used in or on recreational vehicles or boats. This is a slide in unit designed to fit into open-front enclosures. Control panel of the unit is removable for gas hookup, servicing and burner adjustment. Control panel must remain removable after you install the unit. Do not have this panel sealed for any reason.

IMPORTANT!

The lip on the side requires 1" (2.5 cm) of counter top on each side and back to support the unit.

NOTE!

We recommend you build the enclosure for the side burner 6"-12" (15.2 cm- 30.5 cm) LOWER than your counter top. This will ensure a safer environment when using tall cooking pots like the turkey fryer, which can hold 40lbs of hot flammable oil. Please make sure that you do not overfill large pots of oil for the oil will spill over and catch on fire.

This unit should be installed so that it can be removed at a later date if factory service is required.

ENSURING PROPER COMBUSTION AIR AND COOLING AIR FLOW

You must maintain proper air flow for your power burner to perform as it was designed (diagram below) If airflow is blocked, overheating and poor combustion will result. Make sure not to block the 1" (2.5 cm) front air inlet along the bottom of the control panel or more than 75% of the support grid surface with pans or griddles.

NOTE!

The 1" (2.5 cm) front air space allows access to the drip tray.

EXHAUST REMOVAL

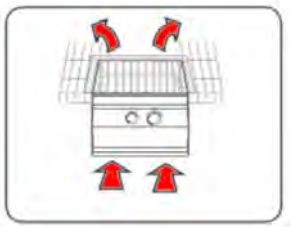

If installed under a patio roof, the cooking grid area should be fully covered by a chimney and exhaust hood. An exhaust fan with a rating of up to 1,000 CFM (472 liters per second) may be necessary to efficiently remove smoke and other cooking byproducts from the covered area. Installation in fully enclosed patio areas is not allowed.

GAS SAFETY REQUIREMENTS

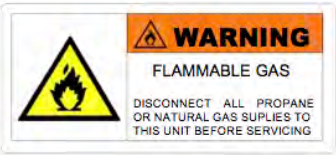

Each appliance is set and tested at the factory for the type of gas supply to be used. Identify the Type of gas, either natural gas or LP (Liquid Propane) gas and make sure that the marking on the rating plate located on the side of the unit matches the gas being supplied to the Side Burner. The rating plate is located on the side of the Side Burner.

All gas hook up connections should be made by a qualified technician and in accordance with local codes and ordinances. The installation must conform with local codes or, in the absence of local codes, with either the national Fuel Gas Code, ANSI Z223.1/NFPA 54, or CAN/CGAB149.1,

WARNING!

- CHECK TO ENSURE THAT THE GAS SUPPLY HOSE DOES NOT COME IN CONTACT WITH ANY HOT SURFACE OF THE POWER BURNER.

L.P. GAS (LIQUIFIED PETROLEUM /PROPANE)

If your Side Burner is factory built for L.P., the regulator required is set for 10" water column and is for use with L.P. gas only. If unit is NOT supplied with regulator please make sure that all requirements are met for the type of regulator required.

L.P. GAS SAFETY REQUIREMENT

The LP-gas supply cylinder must be constructed and marked in accordance with the Specifications for LP-gas Cylinders of the U.S. Department of Transportation (D.O.T.) or the National Standards of Canada CAN/CSA-B339, Cylinders, Spheres and Tubes for the Transportation of Dangerous Goods, and Commission, as applicable; and

1. Provided with a listed overfilling prevention device.
2. Provided with a cylinder connection device compatible with the connection for outdoor cooking appliances.

It must be provided with a shut-off valve terminating in gas tank valve outlet. It must include a Collar to protect the cylinder valve. The cylinder supply system must be arranged for vapor withdrawal.

Do not operate the gas Side Burner indoors or in any enclosed area. If the gas Side Burner is not in use, the gas must be turned off at the supply cylinder. If the Side Burner is to be stored indoors, disconnect the gas supply cylinder and leave the cylinder outdoors.

LP GAS HOOK-UP

Do not use any replacement regulator other than that specified by the manufacturer. Use only pipe sealants that are approved for use with natural and LP gases. An installer-supplied gas shutoff valve must be installed in an accessible location. (Reference: leak test procedure).

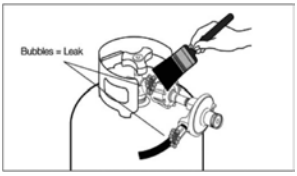

ALTHOUGH AN LP GAS CYLINDER MAY BE USED, IT IS NOT RECOMMENDED DUE TO THE LARGE AMOUNT OF GAS CONSUMPTION AND MAY FREEZE UP THE GAS CYLINDER AS WELL AS A SAFETY RISK.

VENTING YOUR ENCLOSURE

An enclosure or Island for LP gas cylinder must be vented on the level of the cylinder valve and at floor level. The effectiveness of the opening(s) for purposes of ventilation shall be determined with the LP gas supply cylinder in place. This shall be accomplished by one of the following:

A. One side of the enclosure shall be fully open; or
B. For an enclosure having four sides, a top and a bottom: At least two ventilation openings at cylinder valve level shall be provided in the sidewall, equally sized, spaced at 180 degrees (3.14 rad), and unobstructed. Each opening shall have a total free area of not less than 1/2 square inch per pound (7.1 cm2/kg) of stored fuel capacity and not less than a total free area of 10 square inches (64.5 cm2).

Ventilation opening(s) shall be provided at floor level and shall have a total free area of not less than ½" square inch per pound (7.1 cm2/kg) of stored fuel capacity and not less than a total free area of 10 square inches (64.5 cm2). If ventilation openings at floor level are in a sidewall, there shall be at least two openings. The bottom of the openings shall be at floor level and the upper edge no more than 5 inches (127 mm) above the floor. The openings shall be equally sized, spaced at 180 degrees (3.14 rad) and un-obstructed.

⚠ WARNING!

IF YOU SMELL GAS:

1. SHUT OFF GAS TO THE APPLIANCE RIGHT AWAY
2. EXTINGUISH ANY OPEN FLAME
3. MAKE SURE THE COVER IS NOT PLACED OVER THE BURNER
4. IF GAS SMELL CONTINUES, KEEP AWAY FROM THE APPLIANCE AND IMMEDIATELY CALL YOUR GAS SUPPLIER OR FIRE DEPARTMENT.

NATURAL GAS INSTALLATION

The installation must conform with local codes or, in the absence of local codes, with either The national Fuel Gas Code, ANSI Z223.1/NFPA 54, or CAN/CGA-B149.1, Natural Gas Installation Code or CAN/CGA-B149.2, Propane Installation Code.

1. This gas appliance and its individual shutoff valve must be disconnected from the gas supply piping system during any pressure testing of that system at the test pressures in excess of 1/2 psi (3.5 kPa).

2. This appliance must be isolated from the gas supply piping system by closing its individual manual shutoff valve during any pressure testing of the as supply piping system at test pressures equal to or less than 1/2 psi (3.5 kPa).

If the gas Side Burner is factory built for natural gas, the regulator (If included) needs to be set for 4" water column. The regulator is convertible later to 10" water column for system LP application. Do not use with a 20-lb LP cylinder unless the Side Burner is converted. Make sure that the regulator is set for natural gas. To check, remove the top cap. You will find the conversion plastic pin attached to the cap to the underside of the cap. If the disc (1/2 in. diameter) of the pin is close to the cap, then the regulator is set for natural gas. If the disc is at the tip of the pin, away from the brass cap, the regulator is set for system LP application. To convert to natural gas, remove the plastic conversion pin and invert and replace it back in a manner such that the disc is close to the brass cap. For both natural and LP, the maximum inlet pressure is 14" water column.

Do not use any replacement regulator other than that specified by American Made Grills. Use only pipe sealants that are approved for use with natural and LP gases. An installer-supplied gas Shutoff valve must be installed in an accessible location.

LEAK TEST

CAUTION BEFORE TESTING

NEVER USE THE POWER BURNER WITHOUT FIRST LEAK TESTING THE GAS CONNECTIONS.

WARNING: DO NOT USE OPEN FLAME TO CHECK FOR LEAKS. USE OF AN OPEN FLAME COULD RESULT IN A FIRE, EXPLOSION AND BODILY HARM. DO NOT SMOKE WHILE PERFORMING THE LEAK TEST!

IF AT ANYTIME YOU SMELL GAS – SWITCH OFF ALL OF YOUR EQUIPMENT AND CALL A PROFESSIONAL TO DETECT THE GAS LEAK. ALWAYS INFORM ALL MEMBERS OF YOUR FAMILY ABOUT THIS IMPORTANT FACT – SMELL GAS = DO NOT USE THE EQUIPMENT.

To prevent fire or explosion hazard, DO NOT use or permit sources of ignition in the area while performing a leak test. Perform leak test outdoors only. Check to ensure that flexible hoses do not have any cuts and wear that may affect the safety before each use. Use only replacement regulator specified by the manufacturer.

1. Prepare a leak testing solution of soap and water in a spray bottle (50% solution)
2. Confirm that all control knobs are in the off position
3. Turn the main gas supply valve ON
4. Apply the leak test solution by spraying on all of the pipe joints, fittings and hose
5. A gas leak is detected when:
   a. There is a faint smell of gas and/or
   b. There are bubbles around the connections
6. DO NOT ATTEMPT TO IGNITE THE BURNER
7. Turn off the main Gas Supply
8. Call a Certified/qualified professional to repair the GAS LEAK
9. DO NOT attempt to use the Power Burner until the leak is fixed.

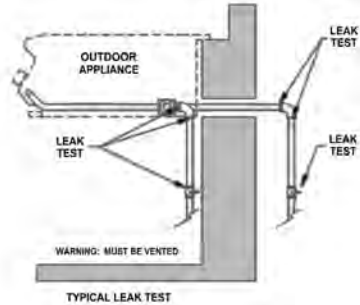

TYPICAL LEAK TEST

NOTE!

Its is recommended to build the Side Burner at least 6"-12" lower than the counter top

TYPICAL BUILDING DIMENSIONS

CLEARANCE TO COMBUSTIBLE CONSTRUCTION :

A minimum clearance of 18" from the sides and back of the Side Burner to adjacent Vertical combustible construction must be maintained.

CLEARANCE TO NONCOMBUSTIBLE CONSTRUCTION:

A minimum clearance of 1" from the back of the Side Burner above cooking surface to non- combustible construction is required.

A minimum of 1" clearance to the sides of the Side Burner above cooking surface to noncombustible construction is recommended.

NOTE: DO NOT USE THIS APPLIANCE UNDER OVERHEAD COMBUSTIBLE SURFACES

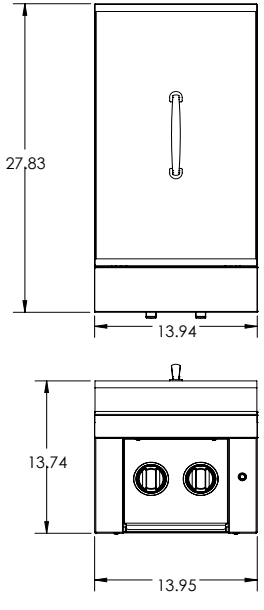

LINE DRAWING FOR ESTSB2
(ESTSB2 PICTURED)

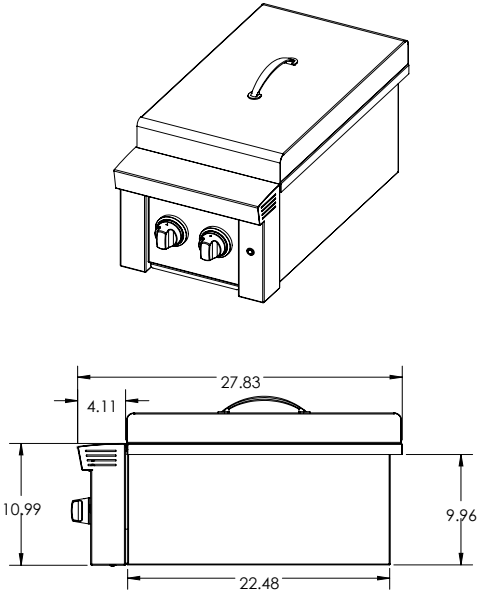

CLEANING & MAINTENANCE

SPIDER AND INSECT WARNING

Spiders and other insects can nest in the burner of this and any other Side Burner, which causes the gas to flow from the front of the burner. This dangerous "condition" can cause a fire behind the valve panel, damaging the Power Burner and making the Power Burner unsafe to operate. Inspect the burners once a year or if the Side Burner has not been used for more than one month or if any of the following conditions occur:

1. The smell of gas in conjunction with the burner flames appearing yellow.
2. The Side Burner does not reach temperature.
3. The Side Burner heats unevenly.
4. The Side Burner makes popping noises

STAINLESS STEEL MAINTENANCE

The Side Burner is made of stainless steel construction.
Never clean the stainless steel when it is hot. After the initial cooking use, certain areas of the Side Burner may discolor. This is a normal discoloration caused by the internal heat given off by the burner. Specks of grease can gather on the surface of the stainless steel and get baked-on. These can be removed by using a mild abrasive pad (like Scotch Brite) with a stainless steel cleaner. Use the mildest cleaner and always scrub in the direction of the grain.

Do not use steel wool to clean the Side Burner.

Do not use abrasives on the polished highlights.

Be extra careful when cleaning around the highlights. Metal polisher or mild chrome cleaner can be used to bring back the luster on highlights. To touch-up minor scratches in the stainless steel, sand the affected surface very lightly, with 100-dry grit emery sandpaper in the direction of the grain.

GRATE MAINTENANCE

The easiest way to clean the grates is to scrub them with a barbeque brush immediately after cooking is completed and the flame is turned off.

Wear a heat protective barbeque mitt to protect your hands from the heat and steam. Dip a brass bristle barbeque brush in tap water and scrub the hot grates. Dip the brush frequently in tap water. Steam, created as water comes in contact with the hot Power Burner, helps loosen food particles stuck in the Power Burner. These food particles will either get burned or fall into the cleaning pan. Cleaning of the Side Burner would be longer and more difficult if the Side Burner grates are allowed to cool before cleaning.

BURNERS CLEANING & MAINTENANCE

Burners are made of heavy gauge stainless steel and can be cleaned using a bristle brush, warm water and soap. Check every port hole for clogs. Use a wire pin to clean out clogged ports. Make sure the burner is dry before installing it back to the Side Burner.

DRIP PAN

The drip pan collects grease, liquid and fallen food particles. Allow the pan and its contents to cool before cleaning. Slide the pan out and wipe it clean. Make sure the drip pan is fully inserted back into the Side Burner. It is highly recommended to clean the pan after every use to avoid any possibility of a grease fire. DO NOT use the Side Burner without the drip pan pushed all the way to the back of the Side Burner unit.

OPERATING INSTRUCTIONS

BEFORE LIGHTING

1. DO NOT ATTEMPT TO LIGHT THE **SIDE** BURNER IF YOU SMELL GAS.

2. **WARNING!**
   IT IS CRITICAL THAT THE GAS BURNERS ARE PROPERLY INSTALLED WITH THEIR ORIFICES INSIDE THE BURNERS AIR SHUTTERS.
   If not properly installed, gas may leak outside of the burner that could lead to fire, potential damage to your Power Burner and bodily injury.

Inspect the gas supply piping or hose prior to turning the gas ON. If there is evidence of cuts, wear, or abrasion, it must be replaced prior to use. The replacement pressure regulator and hose assembly must be the type specified by the manufacturer. Do not use the Side Burner if the odor of gas is present.

If the unit is LP, screw the regulator and hand tighten to the valve of the cylinder and leak check the hose and regulator connections with a soap and water solution before operating the Side Burner. Make sure you always read about LEAK PREVENTION.

Always keep your face and body as far away as possible when lighting.

Refer to spiders and insects warning and procedure under the cleaning and maintenance page of this manual.

LIGHTING THE SIDE BURNER

1. Open the gas supply shut-off valve.

2. Push in the knob to the left wait a few seconds and then click the sure-strike ignition system to ignite. If the igniter does not light turn to the right and OFF position, verify that the gas is on and then try again.

3. Once you see or hear a flame you can adjust the burner to the desired position.

CAUTION: If ignition does not take place within a few clicks, turn knob to the OFF Position, wait for two minutes and repeat step 2.

MATCH/BBQ LIGHTER LIGHTING INSTRUCTIONS:

1. Push and turn the knob counter-clock-wise past the "CLICK" position. Hold the knob pushed in for 2-3 seconds.

2. Insert a lit match or BBQ lighter through the grates and near the top of the burner. Once you see or hear a flame you may release the knob.

NOTE!

If the burner does not ignite for the first time use – there may be "AIR" in the line. Contact your gas professional to bleed out the line.

IMPORTANT: If burner fails to light within 5 seconds, turn off gas and wait 2 minutes before repeating the process.

WARNING!

- If you smell gas with the valves off, shutoff the gas supply and immediately checks for leaks using the soapy water technique.

AMD Direct

GOLD STANDARD WARRANTY

Your investment in AMD Direct product is backed by the strongest warranty in the industry. In addition to precision engineering and outstanding performance, AMD Direct products include our GOLD STANDARD LIFETIME WARRANTY with all replacement parts 100% non-prorated. Effective with purchases 8/1/21.

AMD Direct Warranty is valid for original purchaser at original site of delivery with proof of purchase and photo documentation only. Registration form must be submitted online within 30 days of the purchase date to validate the warranty. Warranty is void upon transfer of ownership. Warranty does not apply to products installed in any commercial, rental, or nonresidential application (exception of the Resort Grill, Alturi, & TRL). Warranty covers replacement parts only. Manufacturer is not responsible for labor or labor-related costs. Warranty does not cover discoloration, surface rust, corrosion, or oxidation, which may occur due to harsh environments, chemicals, or overheating. Warranty will not apply for damage resulting from improper installations, abuse, extreme environments, grease fires, or misuse. Proof of regular and proper maintenance is required. Coastal, humid, and/or salt environments are subject to manufacturer review. All out-of-box claims must be made within 30 days of purchase and must be made prior to installation. Any product installed damaged will be considered damaged during installation and not covered under warranty. Warranty and registration forms are available at **www.amddirect.com/register**. Please be advised - all display models are sold “as is” and the warranty covers the following items only: main burners (Gold Standard Lifetime Warranty), grates (Gold Standard Lifetime Warranty), burner covers (Gold Standard Lifetime Warranty). All warranties are subject to the review and approval of the manufacturer.

79 Carlough Road
Bohemia, NY 11795

757.704.1776

AMDDIRECT.COM

GOLD STANDARD
LIFETIME WARRANTY

AMD DIRECT GAS APPLIANCES (GRILLS, SIDE/POWER BURNERS, & OVEN)

- Gold Standard Lifetime Warranty on construction and manufacturer defects
- Gold Standard Lifetime Warranty on stainless steel construction
- Gold Standard Lifetime Warranty on cooking grates, burners, burner covers, valves, flame tamers, and heatzone separators, temperature gauges, & hood springs
- Gold Standard Lifetime Warranty on briquette systems
- 3 YEAR Warranty on all other parts, components, & electrical, including: LED bulbs, wire harness, & switches; power source wire; transformer; interior halogen light wire & bulb

VENT HOODS, REFRIGERATION, COLD STORAGE & SINKS

VENT HOODS

- 5 Year Warranty on all Stainless Steel Construction
- 3 year Warranty on blowers, LED Lighting, wiring harness and switches

15" & 24" REFRIGERATION MODELS

- 3 year Warranty on all construction including compressors
- 1 year Warranty on transformer, LED bulbs, LED harness, power source wire, LED switches, interior halogen light wire/bulbs

21" REFRIGERATION MODELS

- 1 year Warranty on all construction & electrical components including compressor, transformer, LED bulbs, LED harness, power source wire, LED switches, interior halogen light wire/bulbs

COLD STORAGE & SINKS

- Gold Standard Lifetime Warranty on Ice Chests
- Gold Standard Lifetime Warranty on drains & faucets

DRAWERS, DOORS, GRILL LINERS, & CARTS

- Gold Standard Lifetime Warranty on construction, workmanship and materials for all stainless steel parts, including doors, drawers, grill liners, & carts
- 3 year on electrical (Warming Drawers)

COVERS

- Gold Standard Lifetime Warranty on covers, including grills, carts, side/power burners & oven

MADERA PRODUCTS

- Gold Standard Lifetime Warranty on construction, workmanship and materials for all stainless steel parts, hinges, drawer slides, gasket, & magnets

COMMERCIAL APPLICATIONS

RESORT, ALTURI & TRL GRILLS

- Gold Standard Lifetime Warranty on workmanship, construction, & manufacturer defects for all commercial and/or hospitality applications
- Warranty is void upon misuse, including lack of regular cleaning, vandalism, or theft
- Warranty is valid only if regular maintenance is exercised. Due to the nature of commercial applications (multiple users, lack of control of use, etc.) regular maintenance is mandatory

AMERICAN * MADE * GRILLS

For more information visit:

AMERICANMADEGRILLS.COM

757.704.1776 | 79 Carlough Road Bohemia, NY 11795

VER.111721